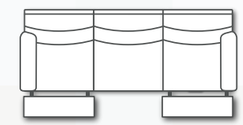

371–31
Double Reclining Sofa
371–61P
Power Headrest Sofa
371–61P NL
Power Headrest Sofawith Next Level
W 92" x D 42" x H 43"

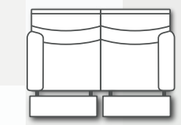

371–21
Double Reclining Loveseat
371–51P
Power Headrest Loveseat
371–51P NL
Power Headrest Loveseatwith Next Level
W 67" x D 42" x H 43"

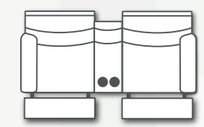

371–28
Double Reclining Console Loveseat with Hidden Cupholders
371–78P
Power Headrest Console Loveseat with Hidden Cupholders
371–78P WC
Power Headrest Console Loveseat with Hidden Cupholders & Wireless Charging
371–78P NL
Power HeadrestConsole Loveseat with Hidden Cupholders & Next Level
371–78P NL WC
Power Headrest Console Loveseat with Hidden Cupholders, Next Level & Wireless Charging
W 81" x D 42" x H 43"

1371
Rocker Recliner
1371S
Swivel Rocker Recliner
5371P
Power Headrest Rocker Reclineri
2371
Wallhugger Recliner
6371P
Power Headrest Wallhugger
6371P NL
Power Headrest Wall Hugger Recliner with Next Level
W 41" x D 43" x H 42"

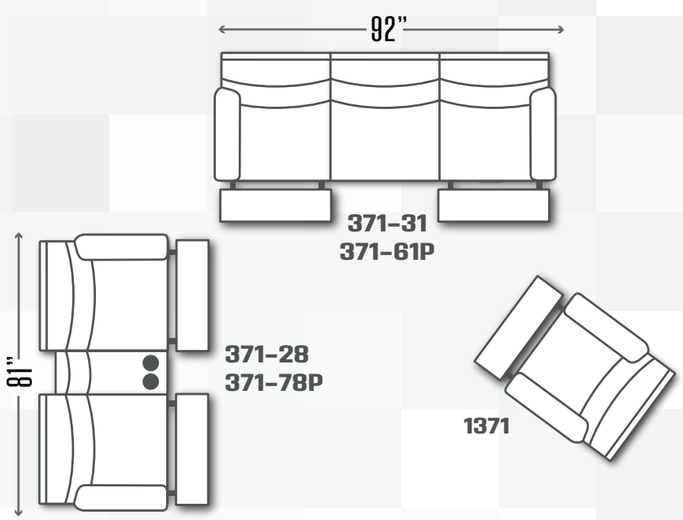

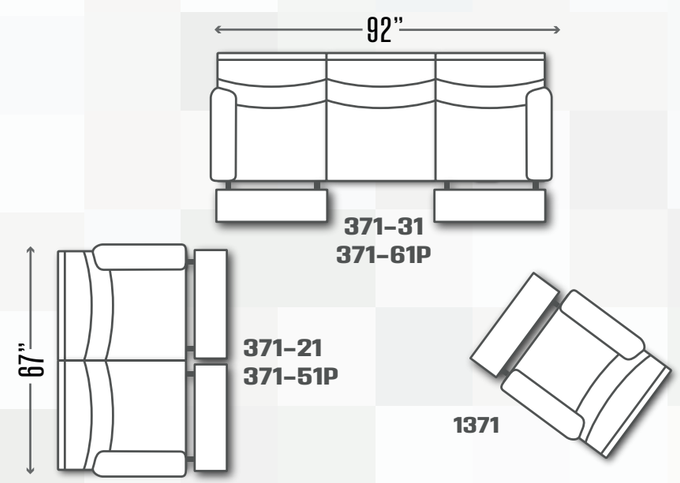

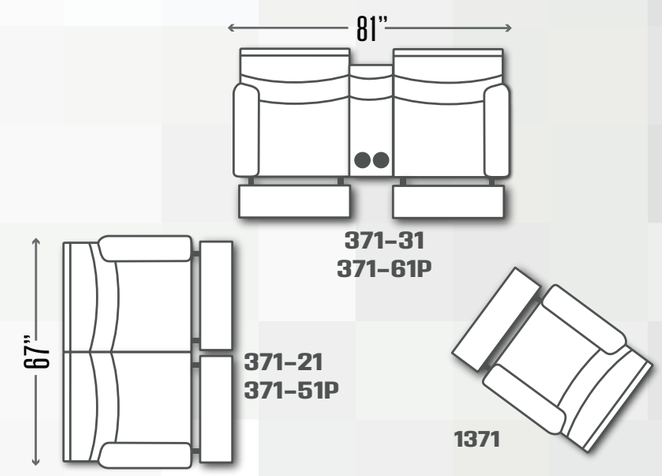

Southern Motion™